Timing Diagram of 8085 Microprocessor

INTRODUCTION

TIMING DIAGRAM :

It is a **graphical representation**. It **represents** the **execution time taken by each instruction** in a graphical format. The execution time is represented in **T-states.**

Instruction Cycle:

The **time required to execute an instruction**.

Machine Cycle:

The **time** required **to access the memory or input/output devices** .

T-State:

The machine cycle and instruction cycle takes multiple clock periods.

A portion of an operation carried out in one system clock period is called as T-state.

TIMING DIAGRAM

MACHINE CYCLES	T- STATES
OPCODE FETCH	4T or 6T
MEMORY READ CYCLE	3T
MEMORY WRITE CYCLE	3T
I/O READ CYCLE	3T
I/O WRITE CYCLE	3T
INTERRUPT ACKNOWLEDGE CYCLE	6T or 12T
BUS IDLE CYCLE	

BASICS OF WAVEFORM

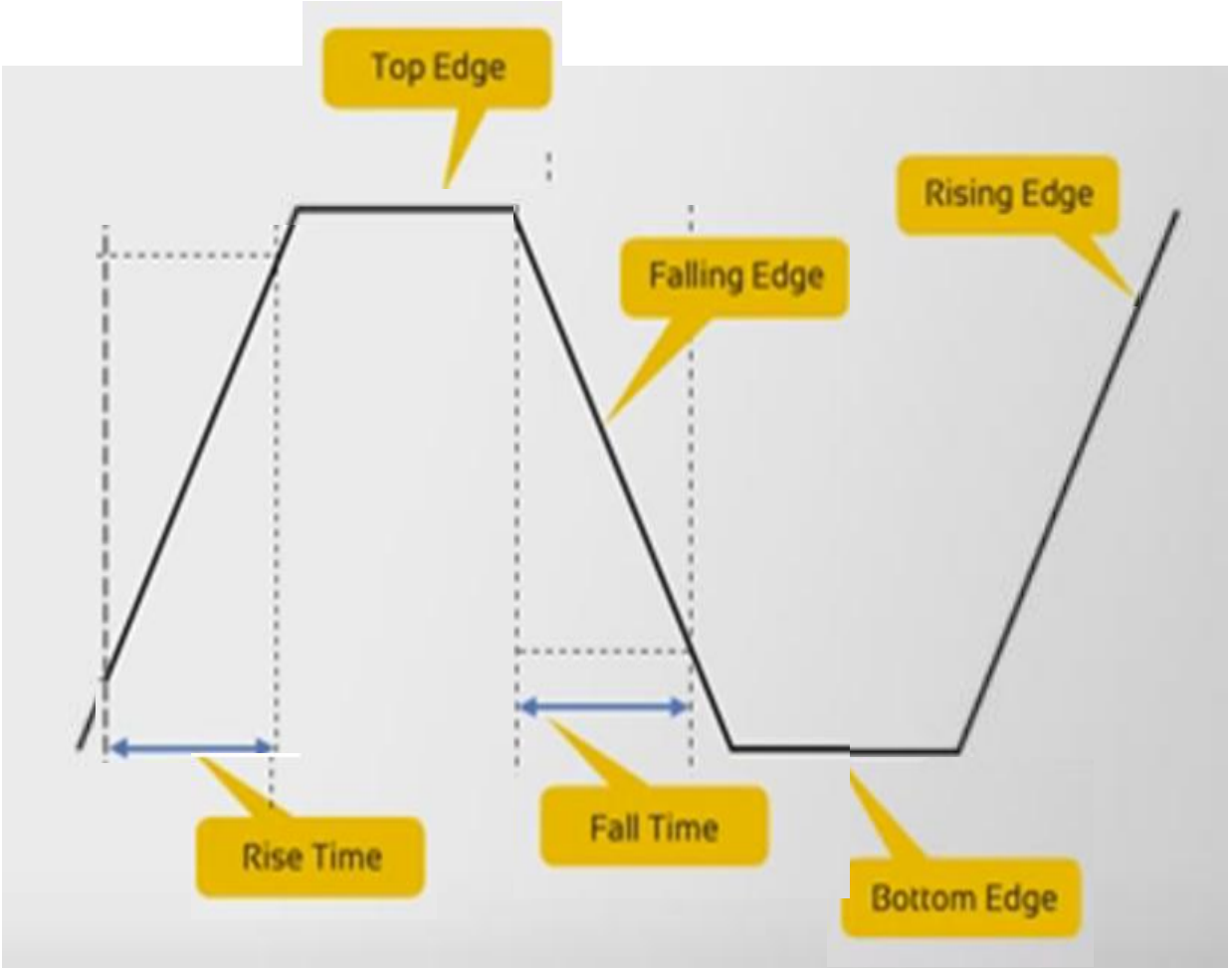

OPCODE FETCH

- The purpose of an Opcode Fetch is to read the contents of a **memory location** containing the **opcode** addressed by the program counter and to **place** it **in** the **instruction register**.
- Opcode fetch machine cycle takes **4 T-states or 6T states**.

T_1 State: IO/M' line

- **IO/M' = 0** (goes low) and **S_1 = 1 & S_0 = 1** to indicate the **memory fetch operation**.
- The memory location containing the opcode is obtained from the PC and it is placed in the **A_8 – A_{15} and AD_0 – AD_7**.
- The **ALE** signal goes **high** to separate the separate the address and data bus.

T_2 State : RD' signal low

- RD' signal goes low to **read** the **opcode** from the memory location mentioned by the PC.
- The opcode is **placed in** the data bus **AD_0 –AD_7**.

T_3 State: Instruction Register

- The opcode is then **transferred to the instruction register**.
- Then **RD' goes high**.

T_4 State: Opcode Decoded

- In this state the **Opcode** which was fetched from the memory is **decoded**.

OPCODE FETCH

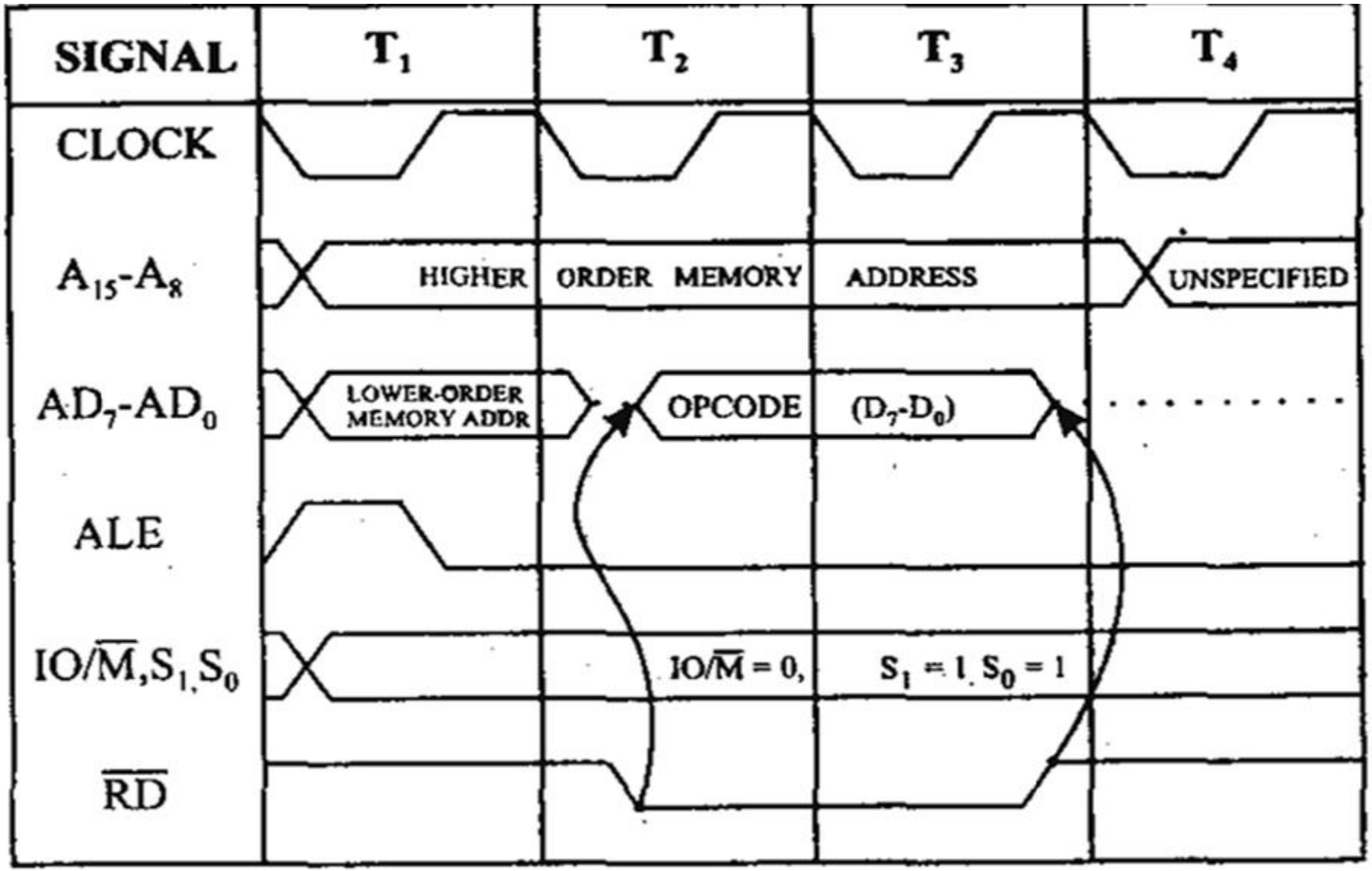

Instructions that required 6T states in OPCODE fetch machine cycle

Instruction	Operation performed
CALL	Stack pointer is decremented by 1
CALL conditional PUSH R_P	Stack pointer is decremented by 1
DCX R_P	Regester pair decremented by 1
INX R_P	Regester pair incremented by 1
PCHL	HL pair trancfered to PC
SPHL	HL pair trancfered to SP
RET conditional	The condition of flags checked

MEMORY READ CYCLE

- The purpose of the memory READ operation is to **read the contents of a memory location** addressed in the instruction and place the data in a register
- **T_1 state: IO/M'=0, S_1=1, S_0=0**
  - **IO/M' = 0** (goes low) and **S_1 = 1 & S_0 = 0** to indicate the **memory read operation**.
  - The memory location containing the data is obtained from the register mentioned in the instruction and it is placed in the **A_8 – A_{15} and AD_0 – AD_7**.
  - The **ALE** signal goes **high** to separate the separate the address and data bus.

- **T_2 state:** RD' goes **LOW**
  - **Data** from the selected memory location is **placed on** the **AD_0 – AD_7** bus.
  - RD' goes **LOW.**
- **T_3 State: Data transferred**
  - The **data** which was loaded on the previous state is **transferred to** the **microprocessor**.
  - In the middle of the T3 state RD' goes high and disables the memory read operation.
  - The data which was obtained from the memory is then decoded.

MEMORY READ CYCLE

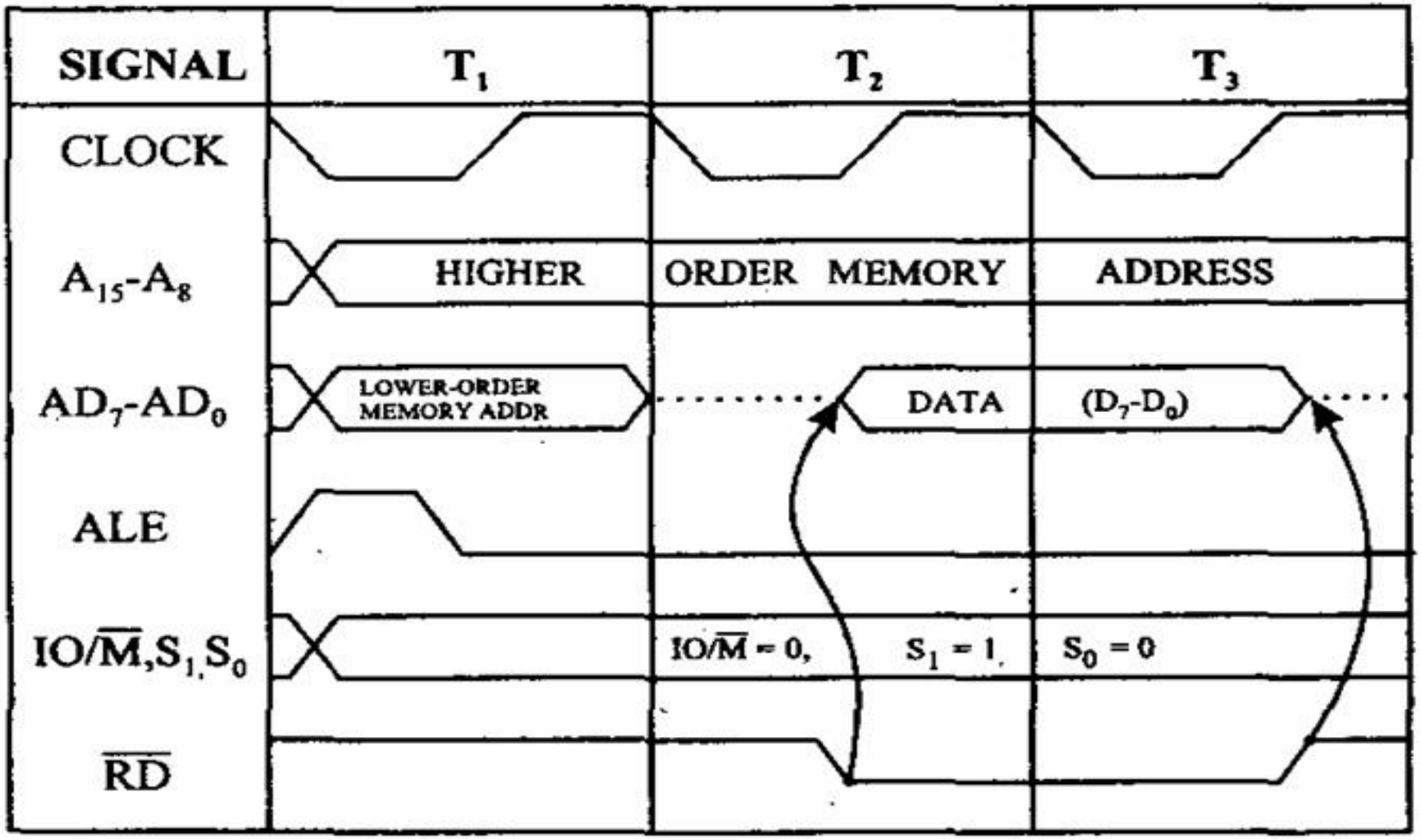

MEMORY WRITE CYCLE

- The purpose of memory write is to store the contents of any one of the registers into a memory location addressed in the instruction.
- **T_1 state: IO/M'=0, S_1=0, S_0=1**
  - **IO/M' = 0** (goes low) and **S_1 = 0 & S_0 = 1** to indicate the **memory write operation**.
  - The memory location containing the data is obtained from the register mentioned in the instruction and it is placed in the **A_8 – A_{15} and AD_0 – AD_7**.
  - The **ALE** signal goes **high** to separate the address and data bus.

- **T_2 state:** WR' goes **LOW**
  - **Data** from the selected register is **placed on** the **AD_0 – AD_7** bus.
  - WD' goes **LOW.**
- **T_3 State:** **Data transferred**
  - The **data** which was loaded on the previous state is **transferred to** the **memory location** mentioned in the instruction.
  - In the middle of the T3 state WR' goes high and disables the memory read operation.
  - The data which was obtained from the memory is then decoded.

MEMORY WRITE CYCLE

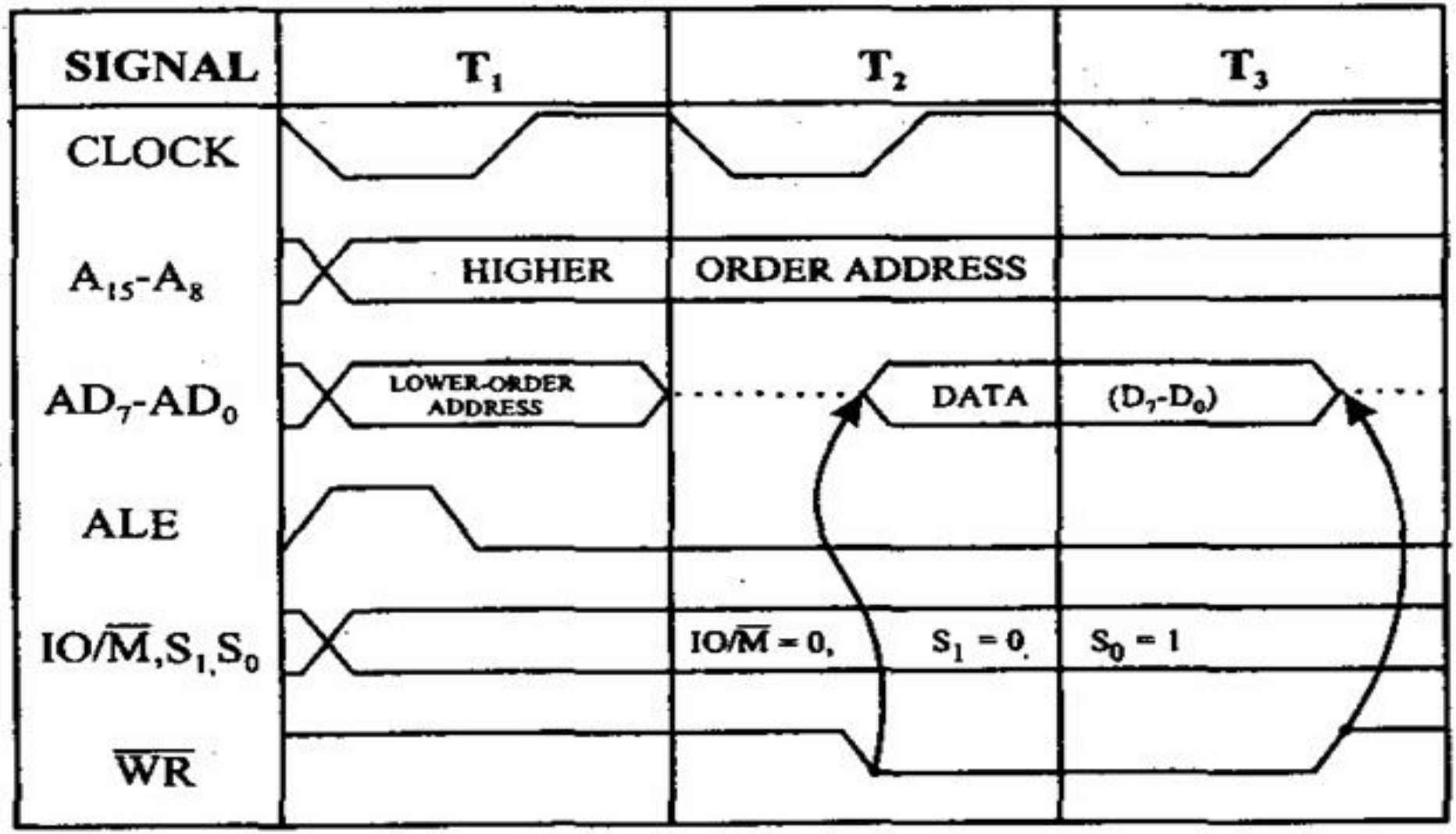

ASSESSMENT QUESTIONS

XRA A has

- **1 machine cycle**
- 2 machine cycle
- 3 machine cycle
- 4 machine cycle

I/O OPERATIONS

- These are identical to MRMC & MWRMC respectively except that appropriate status signals.

$IO/M'=1, S_1=X, S_0=X$

I/O READ CYCLE

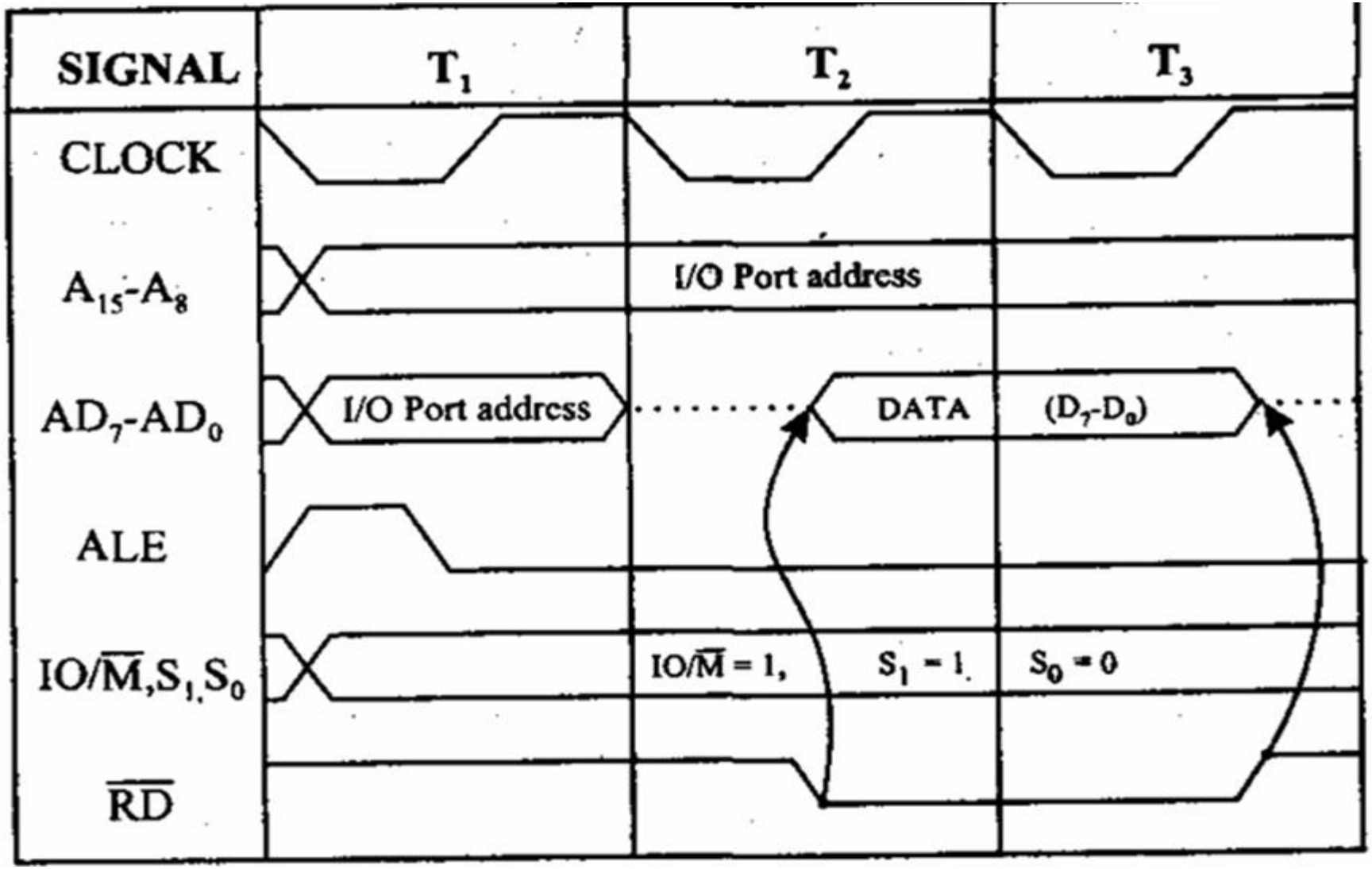

I/O WRITE CYCLE

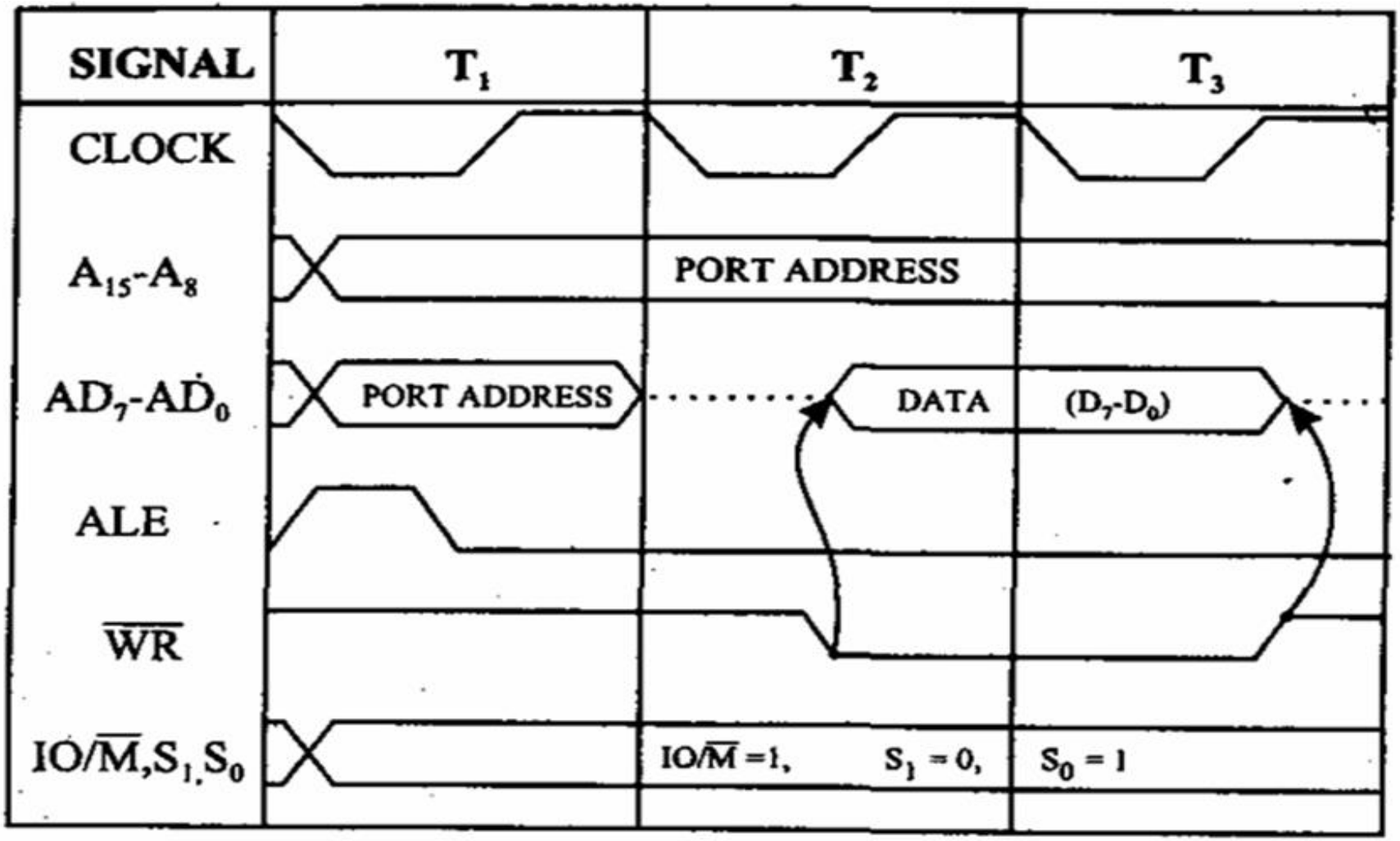

Timing Diagram of "STA 526A"

Machine Cycles : 4 & T states : 13

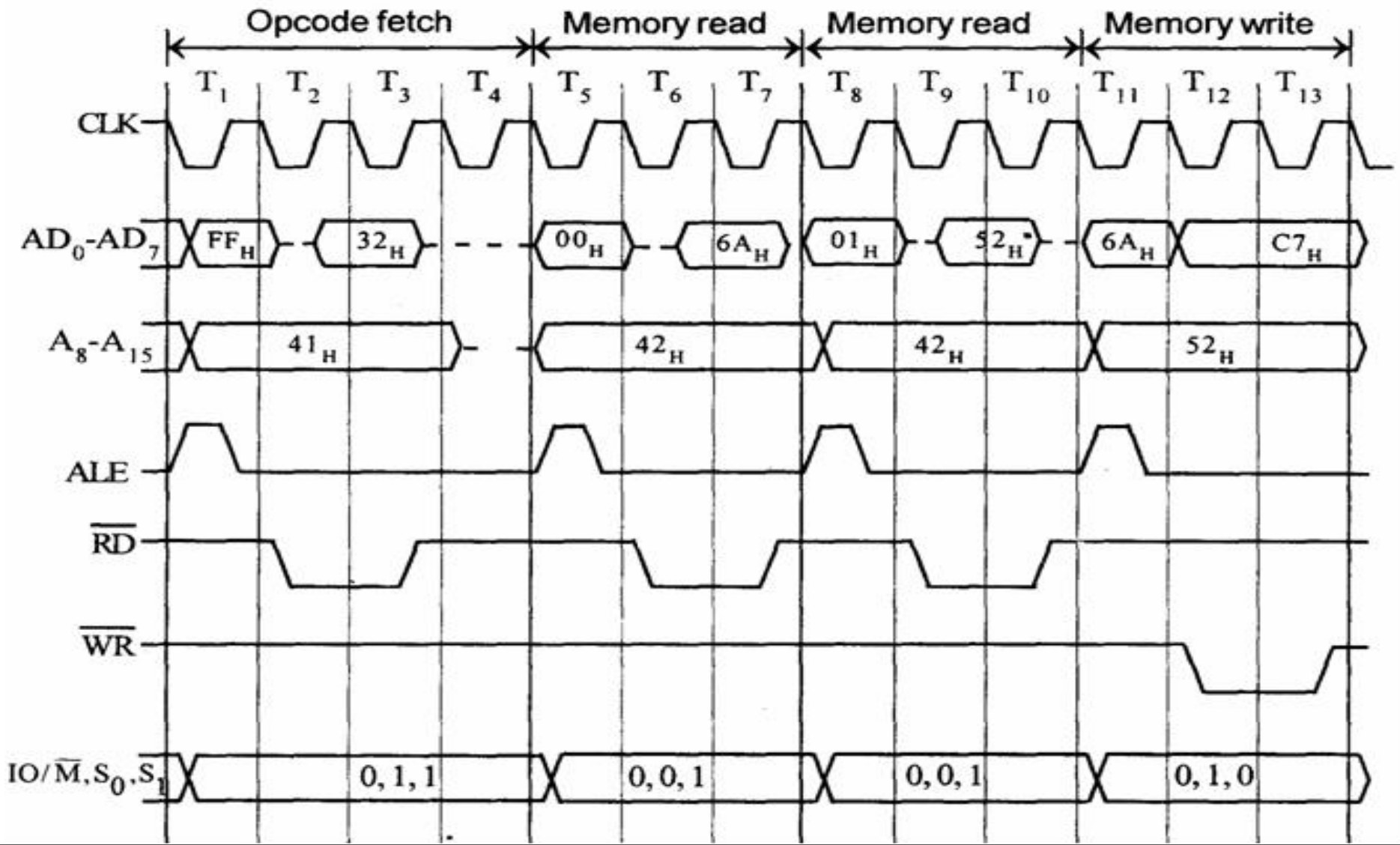

Timing Diagram of "MVI B,43_H"

Machine Cycles : 2 & T states : 7

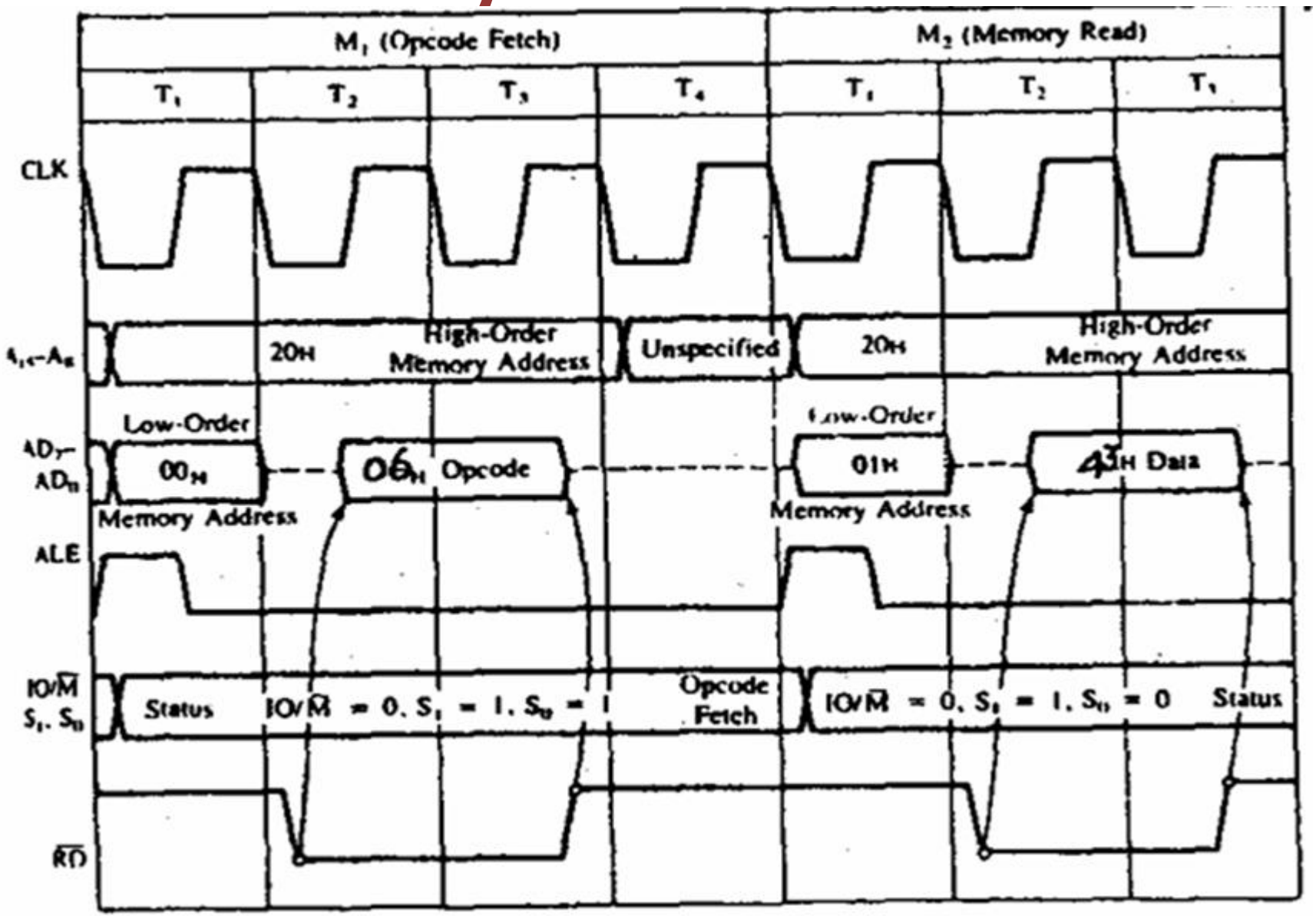

Timing Diagram of "IN CO_H"

Machine Cycles : 3 & T states : 10

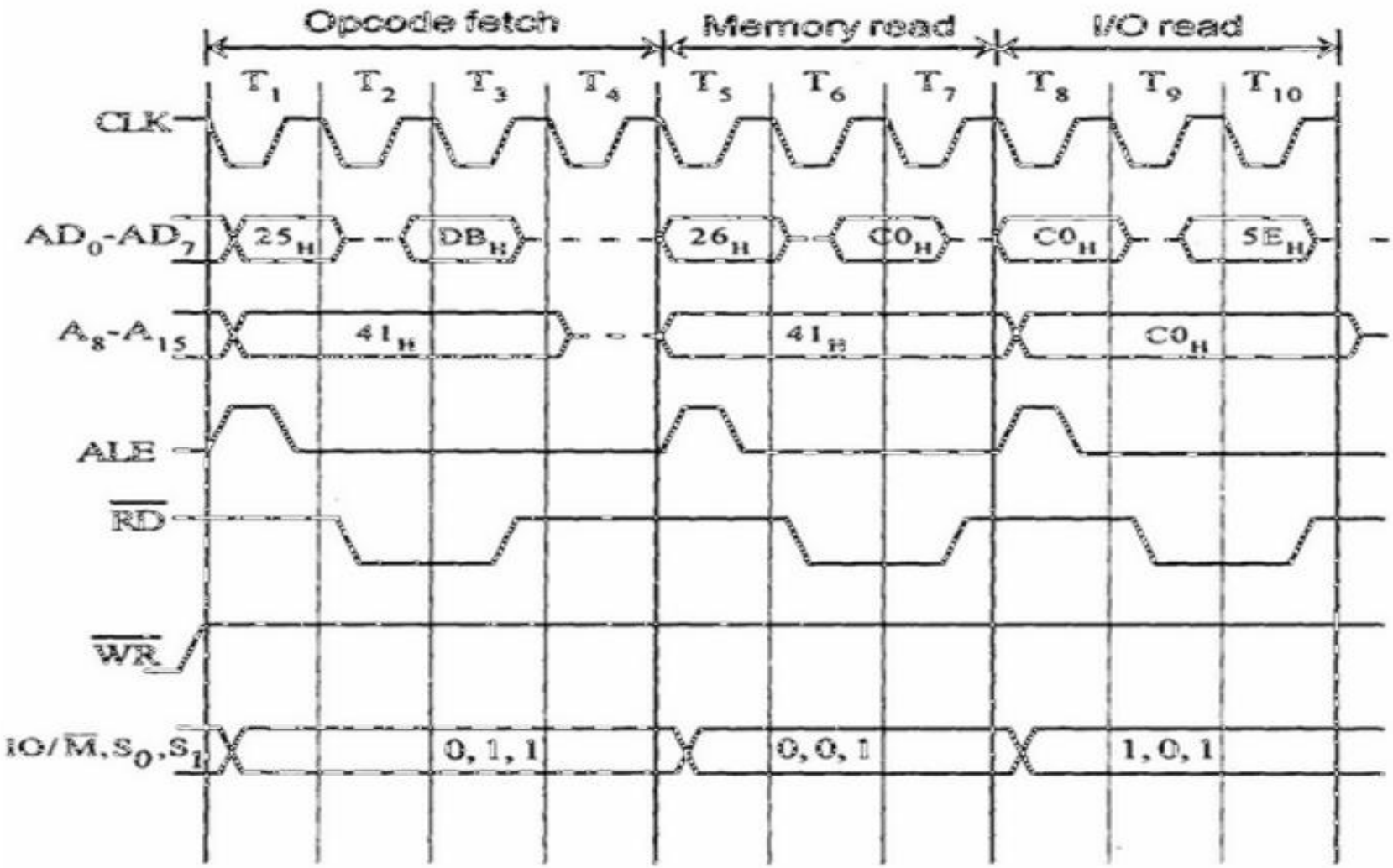

MIND MAP

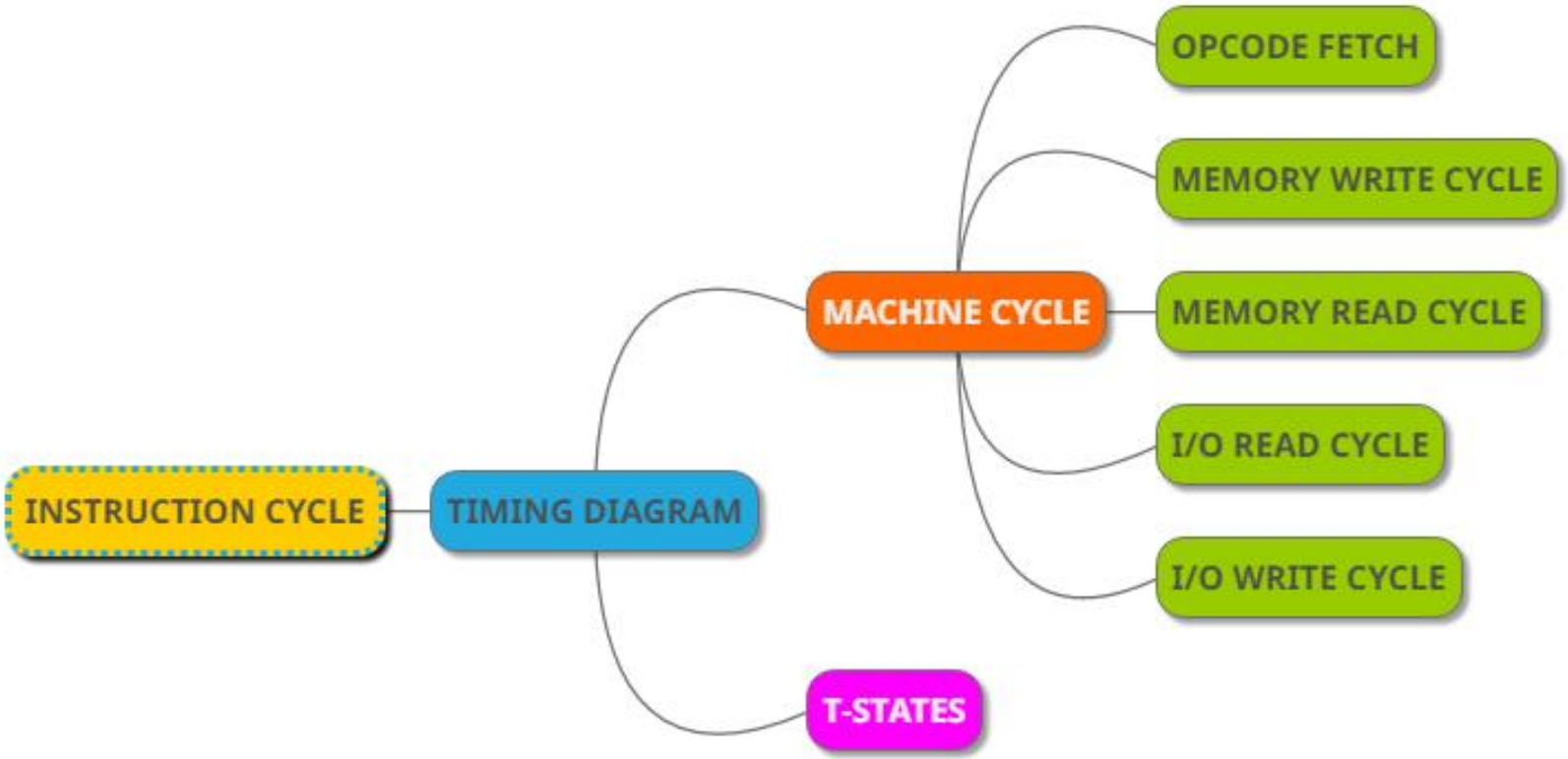
INSTRUCTION CYCLE
TIMING DIAGRAM
MACHINE CYCLE
T-STATES
OPCODE FETCH
MEMORY WRITE CYCLE
MEMORY READ CYCLE
I/O READ CYCLE
I/O WRITE CYCLE